Theoretic Mass(kg)		Revision	
Surface Area(dm2)		A4	

Thread	Hole	Shaft

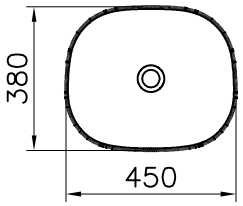

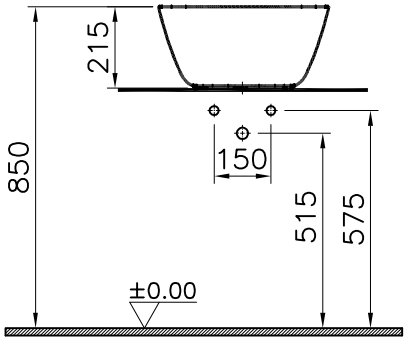

Countertop use
Tezgahüstü kullanim
Aufsatzwaschtisch

item	Quantity	Part Name	Drawing No	Material	Material Class
1	1	Kare Yüksek Çanak Lavabo	7811-0016	Ceramic	

This drawing can only be used for the intended purposes. Unauthorized copying is strictly prohibited.

Series	Material	Material Class
PLURAL	Kare Yüksek Çanak Lavabo	Ceramic

Drawn By	Controlled By	Approved By	Date	Drawing No	Scale
T.TAYAR	N.BALTACI	S.VEDAT SARIGOL	26.09.2018	7811	1/20

VitrA® | ARTEMA®

R.S	Description	Date	NAME