Theoretic Mass(kg)		Revision	
Surface Area(dm2)		A4	

Thread	Hole	Shaft

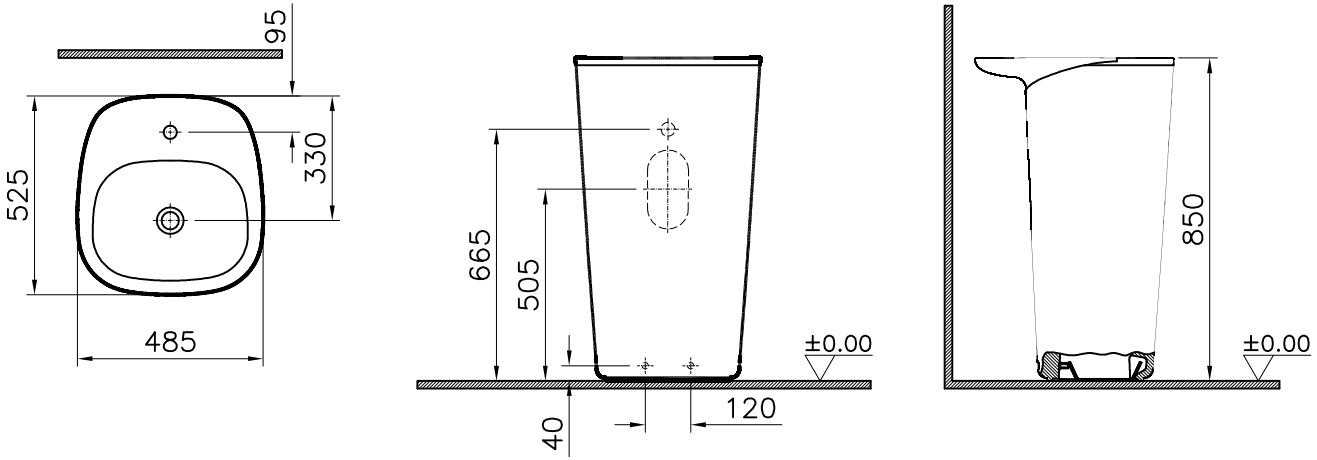

item	Quantity	Part Name	Drawing No	Material	Material Class
1	1	Monoblok Lavabo	7814-0041	Ceramic	

This drawing can only be used for the intended purposes. Unauthorized copying is strictly prohibited.

Series	Material	Material Class
PLURAL	Monoblok Lavabo	

Drawn By	Controlled By	Approved By	Date	Drawing No	Scale
T.TAYAR	N.BALTACI	S.VEDAT SARIGOL	02.10.2018	7814	1/20

VitrA® | ARTEMA®

R.S	Description	Date	NAME