Theoretic Mass(kg)		Revision	
Surface Area(dm2)		A4	

Thread	Hole	Shaft

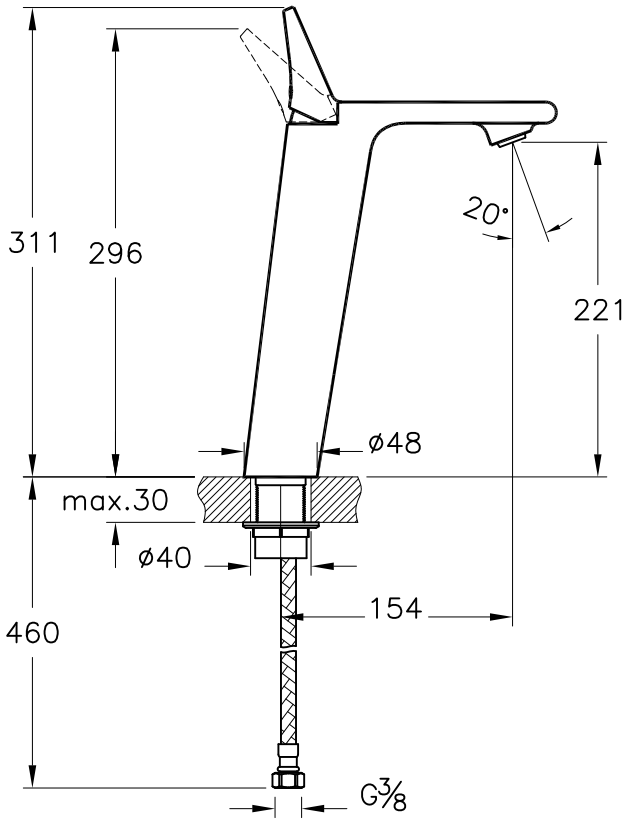

item	Quantity	Part Name	Drawing No	Material	Material Class
1	1	Basin Mixer (High)	A42331		

This drawing can only be used for the intended purposes. Unauthorized copying is strictly prohibited.

Series	Material	Material Class
MEMORIA	Basin Mixer (High)	

Drawn By	Controlled By	Approved By	Date	Drawing No	Scale
T. CETINEL	E. OZTURK	E. TALSIK	05.11.2013	A42331	1/5

VitrA® | ARTEMA®

R.S	Description	Date	NAME