Theoretic Mass(kg)		Revision	
Surface Area(dm2)		A4	

Thread	Hole	Shaft

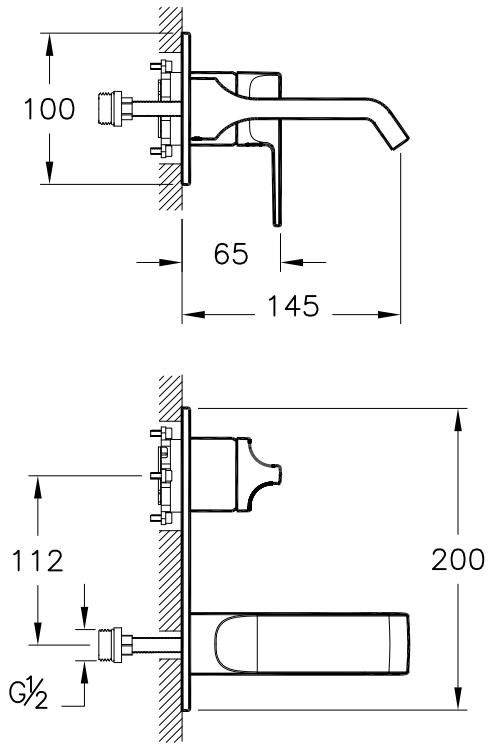

item	Quantity	Part Name	Drawing No	Material	Material Class
1	1	Built-in Basin Mixer	A42487		

This drawing can only be used for the intended purposes. Unauthorized copying is strictly prohibited.

Series	Material	Material Class
SUIT	Built-in Basin Mixer	

Drawn By	Controlled By	Approved By	Date	Drawing No	Scale
T. CETINEL	O. DILBAZ	V. SARIGOL	10.11.2016	A42487	1/5

VitrA® | ARTEMA®

R.S	Description	Date	NAME