T4

Description	T4 Bath Mixer (Deck Mounted)
Code	A41283EXP
Installation Type	Standard
Product Properties	Energy Saving
Working Pressure	0,5-10 Bar (Recommended 3-5 Bar)
EPD	Yes
Coating	Chrome
Cartridge	40 mm Cartridge
Colour	Chrome

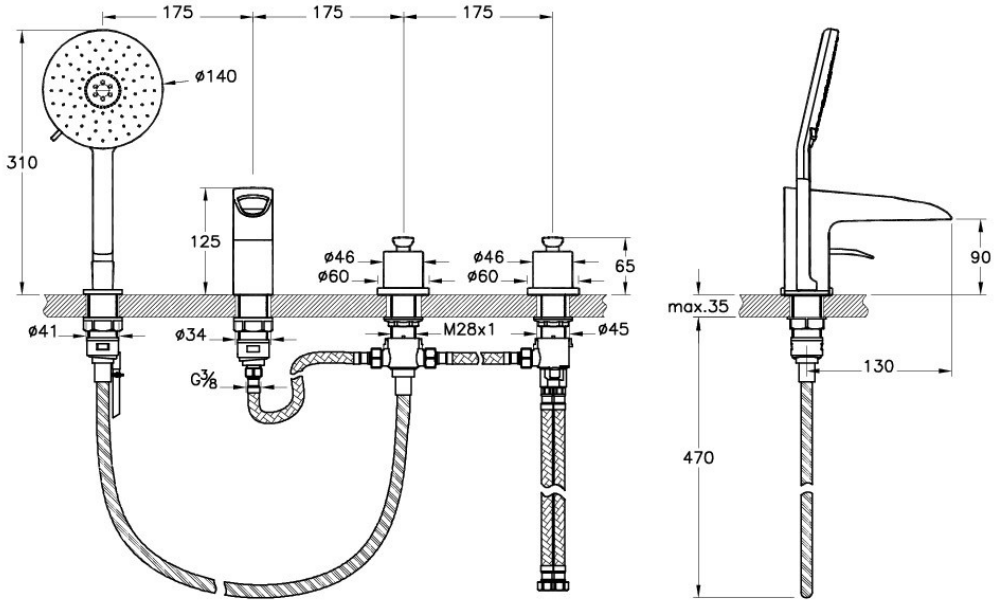

VitrA retains the right to change details about the products and technical specifications without prior notice.