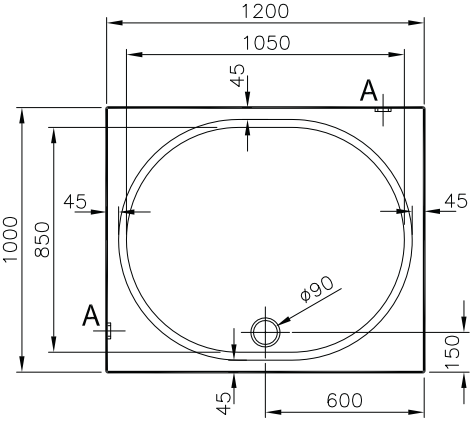
1200
1050
45
A
45
45
1000
850
ø90
A
150
45
600

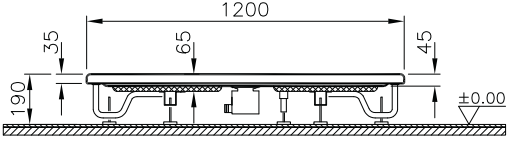
1200
35
65
45
190
±0.00

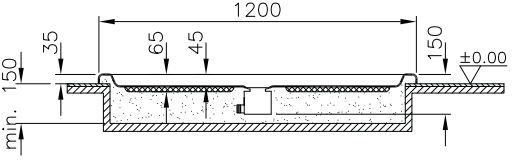
1200
35
65
45
150
150
±0.00
min.